UNIVERSITY OF HILLA

College of Engineering Technologies

Department of Medical Devices Technologies

Fundamental of Electrical Engineering(DC)

Asst. Lect. Morteza Abbas Imran

Eng. Ezz Aldin Ahmed

First Stage

LAB1

Ohm's Law

Objective: Understand and analyze the relationship of voltage, current and resistance in electrical circuits. Ohm's law provides a basic rule for this relationship and represents it with a simple equation: (V = IR). where:

- (V) is the voltage.

- (I) is the current.

- (R) is resistance.

Thanks to this law, engineers and technicians in the field of electricity and electronics can effectively analyze and design electrical circuits, and understand how current and voltage interact at a given resistance. Ohm's law is used as a basic tool in examining circuits and calculating the electrical values necessary to achieve the desired performance.

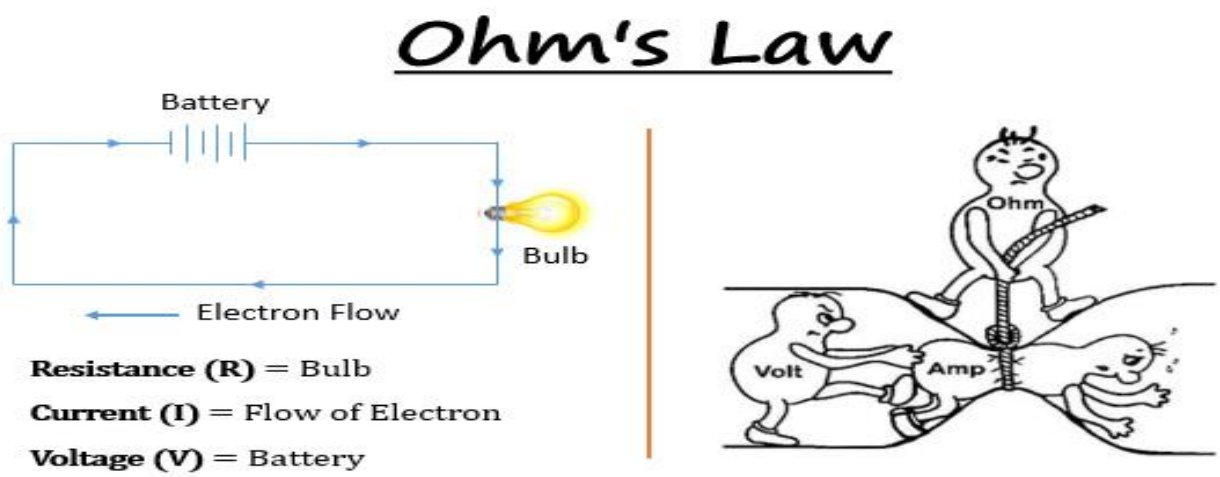

$$R = \frac{V}{I}$$

Quantity	Symbol	Unit of Measurement	Unit Abbreviation
Current	I	Ampere (Amp)	A
Voltage	V or E	Volt	V
Resistance	R	Ohm	Ω

1 Implementing laboratory safety and security procedures.

2. Prepare the AVO device, test it, and determine its validity.

3. Preparing materials and raw materials - resistors and board bread.

4. Set one of the multi-purpose measuring devices (AVO) to the electrical resistance measurement mode.

5. Adjust the multi-purpose measuring device (AVO) to the appropriate range.

6. Make sure not to touch the sensors of the audio device when measuring.

7. Determine the value of the electrical resistance according to the color coding system, and record the process

Calculate the resistance using color coding in the observations box, then record the value in a table

Results.

8. Connect the electrical circuit as shown in the following figure

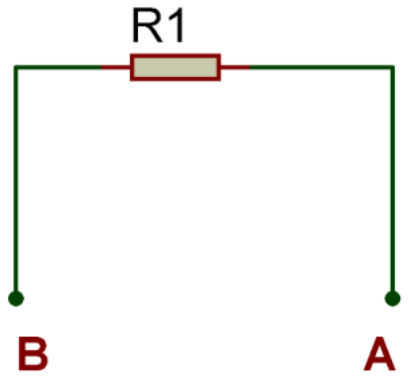

Fig(1)

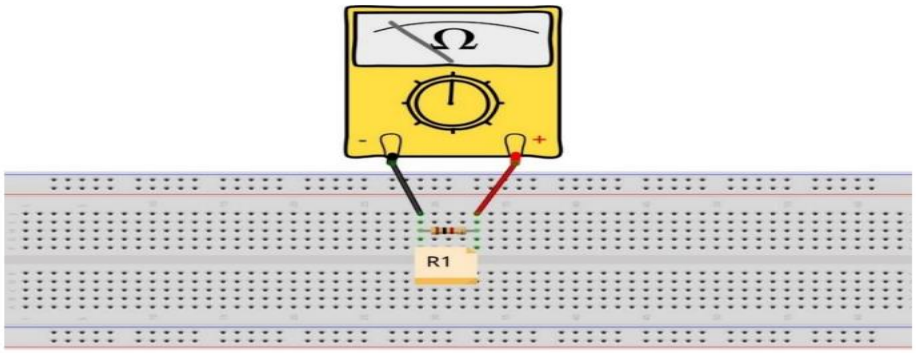

Fig(2)

Types of connecting resistors:

1) Connect the resistors in series.

Resistors in series refers to connecting resistors in a way that allows current to flow through each resistor in series. In this connection, the terminal of one resistor is connected to the terminal of the other, and so the resistors follow in series

In a series of resistors, the current across each resistor varies according to Ohm's Law, where the current is equal across all resistors, and the difference in voltage across each resistor is proportional to the value of the resistance.

This type of connection is used to increase the total resistance, as the values of the resistors are summed when connected in series. The values of the resistors in series are simply added and calculated directly.

RT = R1 + R2 +R3 + … RN
I=I1=I2=I3
V=V1+V2+V3

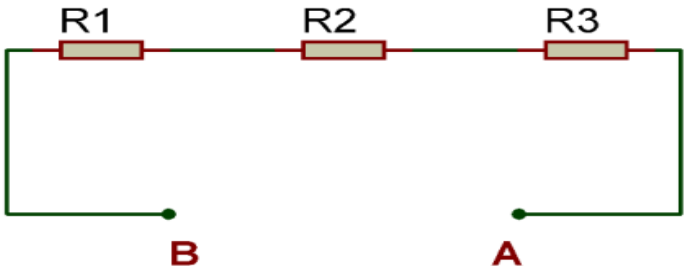

Fig(3)

2)Connect the resistors in parallel.

When resistors are connected in parallel in an electrical circuit, you have parallel paths for electrical current to pass through. With this connection, the ends of the resistors are connected together, and the same voltage is applied to each resistor individually.

The main advantage of connecting resistors in parallel is that you can increase the overall capacitance of the circuit without affecting the voltage. In this connection, the total resistance of the circuit decreases as the number of resistors connected in parallel increases.

These resistors do not follow the same addition equation as in series connection, but rather use their own equation to calculate the total resistance, as I mentioned in the previous response.

$$I = I_1 + I_2 + I_3$$

$$\in = V_1 = V_2 = V_3$$

$$\boxed{\therefore \frac{1}{R} = \frac{1}{R_1} + \frac{1}{R_2} + \frac{1}{R_3}}$$

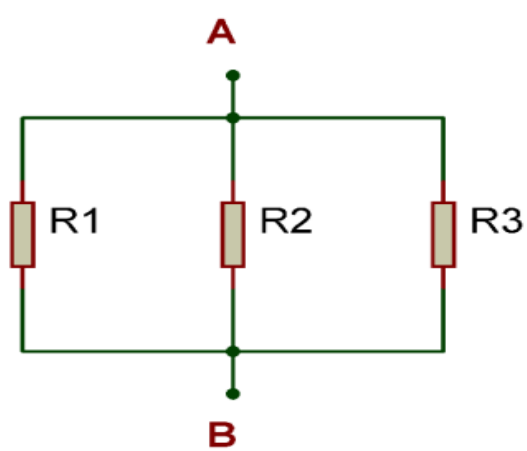

Fig(4)